MEMCON (*Asia*) Limited

1206 Super Slim SMD LEDs for Membrane Switches

0.35mm High Super Slim LEDs ideal for keeping Spacer Thickness to a minimum in Membrane Applications

8mm Tape & Reel for Automated Placement

2,000 Pieces per Reel

Wide Brightness & Colour Range

RoHS Compliant

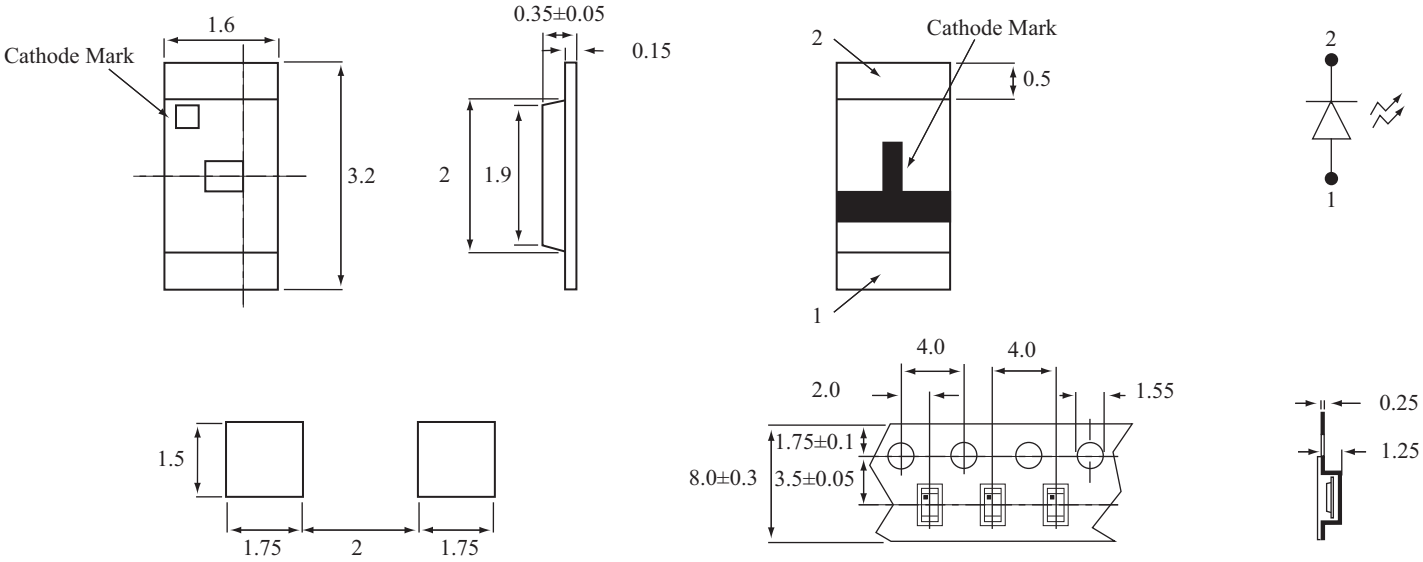

Part Number	Power Dissipation	Peak Forward Current	Continuous Forward Current	Reverse Voltage	Operating Temp Range	Storage Temp Range	Soldering Temp
ML153N-RWT	78mW	150mA	30mA	5V	-40°C ~ +85°C	-40°C ~ +85°C	260°C for 10 Sec
ML153N-OWT	72mW	100mA	30mA	5V	-40°C ~ +85°C	-40°C ~ +85°C	260°C for 10 Sec
ML153N-YWT	78mW	100mA	30mA	5V	-40°C ~ +85°C	-40°C ~ +85°C	260°C for 10 Sec
ML153N-GWT	78mW	100mA	30mA	5V	-40°C ~ +85°C	-40°C ~ +85°C	260°C for 10 Sec
ML153G-BWT	120mW	100mA	30mA	5V	-40°C ~ +85°C	-40°C ~ +85°C	260°C for 10 Sec
ML153G-WWT	99mW	100mA	30mA	5V	-40°C ~ +85°C	-40°C ~ +85°C	260°C for 10 Sec

Part Number	Lighting Colour	Die Material	V_F			Peak Wavelength typ (nm)	Dominant Wavelength typ (nm)	I_V			Viewing Angle (deg)
			I_F (mA)	typ (V)	max (V)			I_F (mA)	min (mcd)	typ (mcd)	
ML153N-RWT	Red	AlGaInP	20	2.4	2.6	650	630	20	35	90	130°
ML153N-OWT	Amber	AlGaInP	20	2.0	2.4	618	610	20	30	110	130°
ML153N-YWT	Super Yellow	AlGaInP	20	2.0	2.6	592	590	20	35	135	130°
ML153N-GWT	Super Green	AlGaInP	20	2.1	2.6	570	574	20	25	70	130°
ML153G-BWT	Super Blue	GaN	20	3.5	4.0		470	20	35	100	130°
ML153G-WWT	White	GaN	20	3.5	4.0			20	110	300	130°

Level 7 Parkview Centre 7 Lau Li Street Causeway Bay Hong Kong
T +852 3741 1411 F +852 3747 8980
www.memcon.asia sales@memcon.asia